FILE 0067\EHK2V-XXP

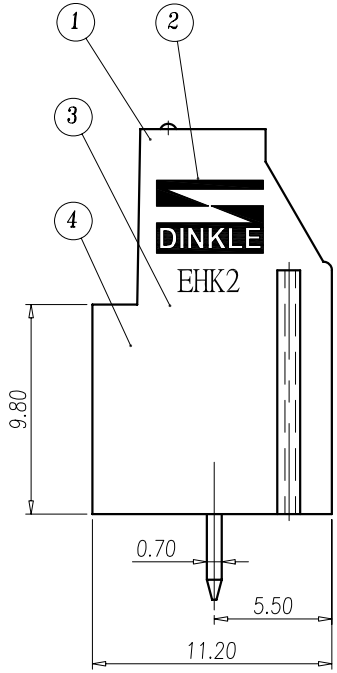

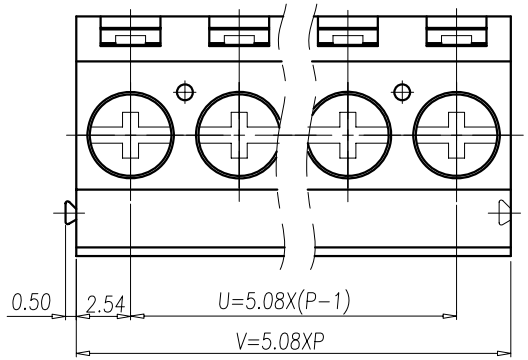

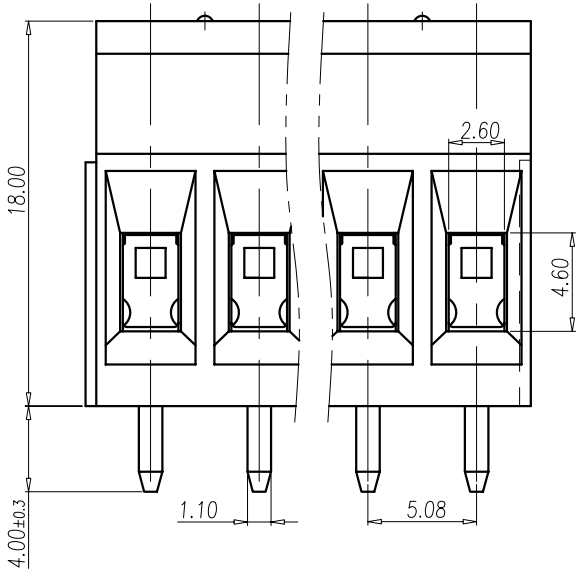

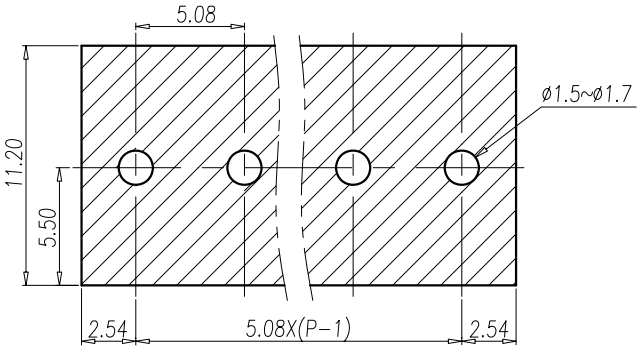

P.C.B. LAYOUT (S=4:1)

NOTES:

1. Rating: 300V 20A FW2
   300V 25A FW1
   (IEC 450V 24A)

   PITCH: 5.08mm
2. Insulation Withstands Voltage:
   AC 2000V at 1 minute
3. Insulation Resistance:
   500MΩ or more at DC500V
4. Using Temperature Range:
   −40°C~+105°C
5. Screw Torque Value: 0.45N • m
6. Suitable Electric Wire:
   AWG 24~12
   (IEC 0.5~2.5mm^2)
7. RoHS Compliance

P	2	3	4	5	6	7	8	9	10	11	12	13
U	5.08	10.16	15.24	20.32	25.40	30.48	35.56	40.64	45.72	50.80	55.88	60.96
V	10.16	15.24	20.32	25.40	30.48	35.56	40.64	45.72	50.80	55.88	60.96	66.04
P	14	15	16	17	18	19	20	21	22	23	24	
U	66.04	71.12	76.20	81.28	86.36	91.44	96.52	101.60	106.68	111.76	116.84	
V	71.12	76.20	81.28	86.36	91.44	96.52	101.60	106.68	111.76	116.84	121.92	

ITEM	NAME OF PART	MATERIAL	NOTES
4	SOLDER PIN	COPPER ALLOY	Tin Plated
3	WIRE CAGE	STEEL	Zn Plated
2	SCREW	STEEL	M2.5/Zn Plated
1	HOUSING	PA66	UL94-V0 GREEN

Normal Geometric Tolerancing

— //		⌭	⊥	
0 to 100	0.2	0.3	0 to 10	0.2
over 100 to 150	0.3		over 10	0.3
over 150	0.5			

Total Pitch Tolerances		Normal dimension Tolerances	
0<U<=30	±0.20	0~30	±0.25
30<U<=53	±0.25	over 30~53	±0.30
53<U<=70	±0.30	over 53~70	±0.35
70<U<=90	±0.35	over 70~90	±0.44
90<U<=115	±0.44	over 90~115	±0.55
115<U<=150	±0.55	over 115~150	±0.70
150<U<=200	±0.70	over 150~200	±0.85
200<U<=250	±0.85	over 200~250	±1.00
250<U<=320	±1.00	over 250~320	±1.20

REV.	CONTENT	CHK.	DATE
2			

DWG.	HQY	DATE	14.02.12	UNITS	MM
CHK.		DATE		SCALE	4:1 (:)
APP.		DATE		NAME	EHK2V-XXP
DINKLE ENTERPRISE CO.,LTD				DWG NO.	SP-03-EHK2V000

SHEET/OF 1/1